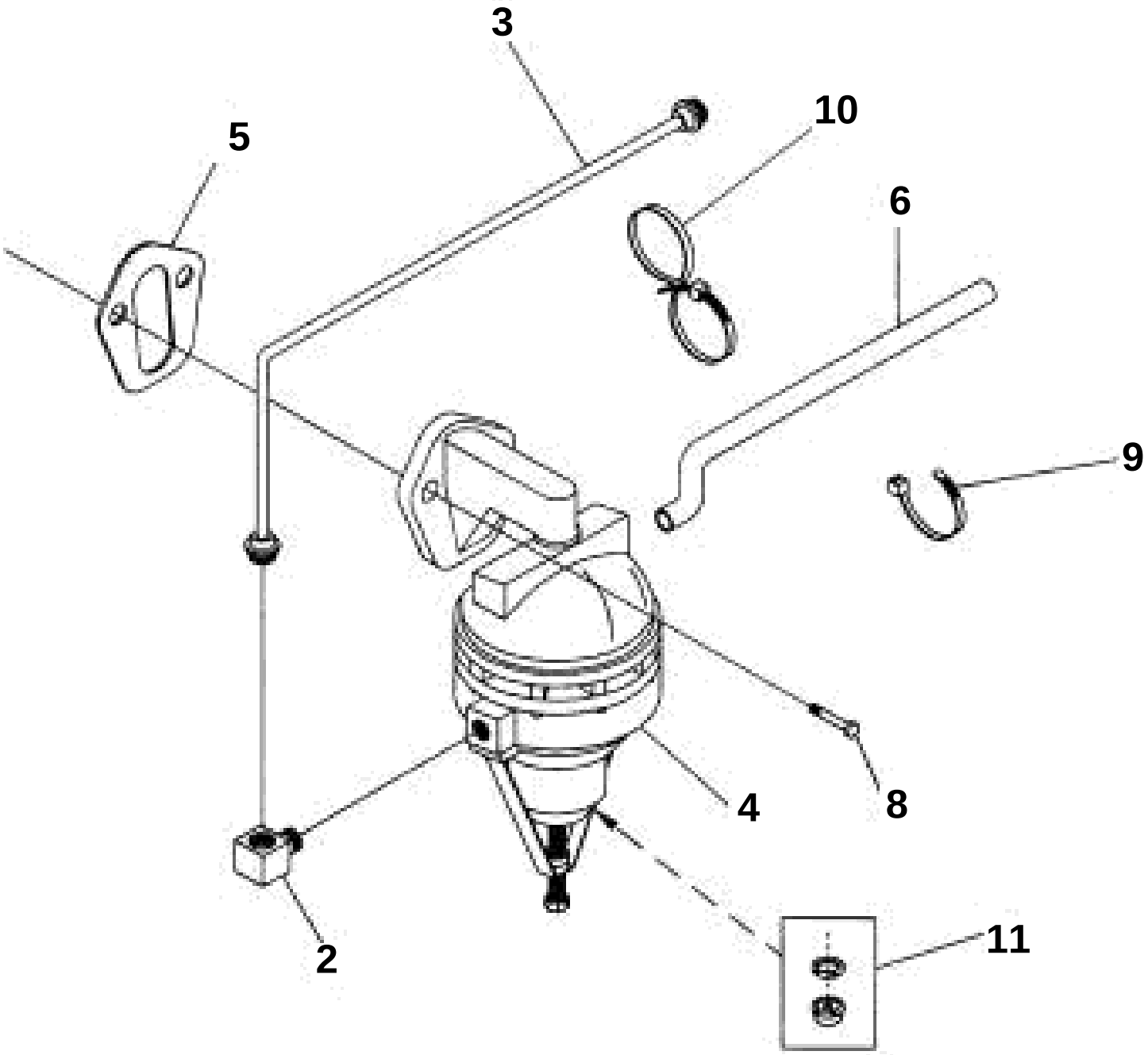
3
10
5
6
9
4
8
2
11

FUEL PUMP & FILTER

REF	PART NO.	QTY	DESCRIPTION
1	3852427	2	Clamp, Fuel line to bracket
2	3852453	1	Fitting, Fuel pump outlet
3	3854869	1	Fuel pipe, Pump to carburetor
4	3854858	1	Fuel pump
5	3854865	1	Gasket, Fuel pump to engine
6	3854242	1	Hose, Overflow, pump to carb
7	3852473	1	Screw, Clamp to bracket
8	3853397	2	Screw, Fuel pump to engine
9	3852158	1	Lock strap, Overflow hose
10	3852486		Lock strap, Overflow hose to fuel line
11	3855104	1	Fuel filter insert, Fuel pump